# 74V2T66

## Dual bilateral switch

## Features

- High speed:
  - $t_{PD}$ = 0.6ns (Typ) at $V_{CC}$ = 5V
- Compatible with TTL level
- Low power consumption
  - $I_{CC}$ = 1mA(Max.) at $T_A$ = 25°C
- Low "ON" resistance:
  - $R_{ON}$ = 10Ω (Typ.) at $V_{CC}$ = 5V $I_{I/O}$ = 1mA
- Sine wave distortion:
  - 0.04% at $V_{CC}$ = 5.0V, f = 1KHz
- Operating voltage range:
  - $V_{CC}$ (Opr) = 2.0V to 3.6V

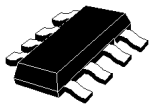

**SOT23-8L**

## Description

The 74V2T66 is an advanced high-speed CMOS dual bilateral switch fabricated in silicon gate $C^2MOS$ technology. It achieves high speed propagation delay and very low on resistances while maintaining true CMOS low power consumption. This bilateral switch handles rail to rail analog and digital signals that may vary across the full power supply range (from GND to $V_{CC}$)

The C input is provided to control the switch and it's compatible with standard CMOS output; the switch is ON (port I/O is connected to Port O/I) when the C input is held high and OFF (high impedance state exists between the two ports) when C is held low. It can be used in many application as Battery Powered System, Test Equipment. It's available in the commercial and extended temperature range in SOT23-8L package. All inputs and output are equipped with protection circuits against static discharge, giving them ESD immunity and transient excess voltage.

## Order code

| Part number | Package | Packing |
|---|---|---|
| 74V2T66STR | SOT23-8L | Tape and reel |

# Contents


**1 Logic symbols and I/O equivalent circuit . . . . . 3**

**2 Pin settings . . . . . 4**

2.1 Pin connection . . . . . 4

2.2 Pin description . . . . . 4

2.3 Truth table . . . . . 4

**3 Maximum rating . . . . . 5**

3.1 Recommended operating conditions . . . . . 5

**4 Electrical characteristics . . . . . 6**

**5 Switching caracteristics test circuit . . . . . 8**

**6 Package mechanical data . . . . . 10**

**7 Revision history . . . . . 13**

# 1 Logic symbols and I/O equivalent circuit

**Figure 1. IEC logic symbols**

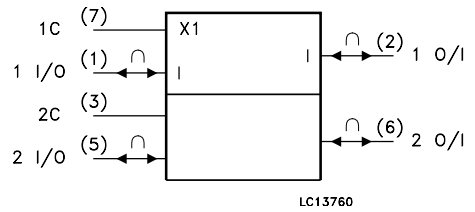


**Figure 2. Input and output equivalent circuit**

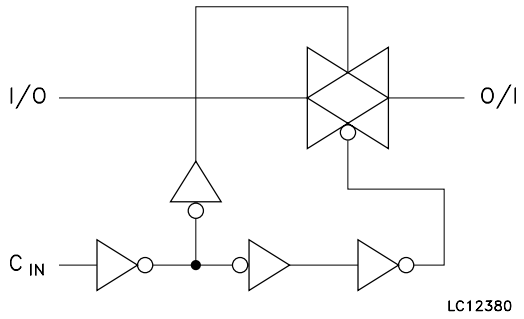

# 2 Pin settings

## 2.1 Pin connection

**Figure 3. Pin connection** (top through view)

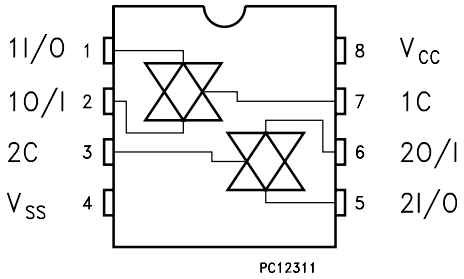


## 2.2 Pin description

**Table 1. Pin description**

| Pin N° | Symbol | Name and function |
|---|---|---|
| 1, 5 | 1I/O, 2I/O | Independent Input/Output |
| 2, 6 | 1O/I, 2O/I | Independent Output/Input |
| 7, 3 | 1C, 2C | Enable Input (Active HIGH) |
| 4 | GND | Ground (0V) |
| 8 | $V_{CC}$ | Positive Supply Voltage |

## 2.3 Truth table

**Table 2. Truth table**

| Control | Switch Function |
|---|---|
| H | ON |
| L | OFF (1) |

1. High impedance state

# 3 Maximum rating

stressing the device above the rating listed in the “absolute maximum ratings” table may cause permanent damage to the device. these are stress ratings only and operation of the device at these or any other conditions above those indicated in the operating sections of this specification is not implied. exposure to absolute maximum rating conditions for extended periods may affect device reliability. refer also to the STMicroelectronics sure program and other relevant quality documents.

**Table 3. Absolute maximum ratings**

| Symbol | Parameter | Value | Unit |
|---|---|---|---|
| $V_{CC}$ | Supply voltage | -0.5 to +7.0 | V |
| $V_I$ | DC input voltage | -0.5 to $V_{CC}$ + 0.5 | V |
| $V_{IC}$ | DC control input voltage | -0.5 to +7.0 | V |
| $V_O$ | DC output voltage | -0.5 to $V_{CC}$ + 0.5 | V |
| $I_{IK}$ | DC input diode current | ± 20 | mA |
| $I_{IK}$ | DC control input diode current | - 20 | mA |
| $I_{OK}$ | DC output diode current | ± 20 | mA |
| $I_O$ | DC output current | ± 50 | mA |
| $I_{CC}$ or $I_{GND}$ | DC $V_{CC}$ or ground current | ± 50 | mA |
| $T_{stg}$ | Storage temperature | -65 to +150 | °C |
| $T_L$ | Lead temperature (10 sec) | 300 | °C |

## 3.1 Recommended operating conditions

**Table 4. Recommended operating conditions**

| Symbol | Parameter | Value | Unit |
|---|---|---|---|
| $V_{CC}$ | Supply voltage | 4.5 to 5.5 | V |
| $V_I$ | Input voltage | 0 to $V_{CC}$ | V |
| $V_{IC}$ | Control input voltage | 0 to 5.5 | V |
| $V_O$ | Output voltage | 0 to $V_{CC}$ | V |
| $T_{op}$ | Operating temperature | -55 to 125 | °C |
| dt/dv | Input rise and fall time [(1)] $V_{CC}$ = 5.0V | 0 to 20 | ns/V |

1. $V_{IN}$ from 0.8V to 2V on control pin

# 4 Electrical characteristics

**Table 5. DC characteristics**

| Symbol | Parameter | Test condition | | Value | | | | | | | Unit |
|---|---|---|---|---|---|---|---|---|---|---|---|
| | | $V_{CC}$ (V) | | $T_A$ = 25°C | | | -40 to 85°C | | -55 to 125°C | | |
| | | | | Min. | Typ. | Max. | Min. | Max. | Min. | Max. | |
| $V_{IH}$ | High level input voltage | 5.0(1) | | 2 | | | 2 | | 2 | | V |
| $V_{IL}$ | Low level input voltage | 5.0(1) | | | | 0.8 | | 0.8 | | 0.8 | V |
| $R_{ON}$ | ON resistance | 5.0(1) | $V_{IC} = V_{IH}$<br>$V_{I/O} = V_{CC}$ to GND<br>$I_{I/O} \leq 1mA$ | | 12 | 17 | | 20 | | 24 | Ω |
| $R_{ON}$ | ON resistance | 5.0(1) | $V_{IC} = V_{IH}$<br>$V_{I/O} = V_{CC}$ or GND<br>$I_{I/O} \leq 1mA$ | | 10 | 14 | | 18 | | 20 | Ω |
| $I_{OFF}$ | Input/output leakage current (SWITCH OFF) | 5.5 | $V_{OS} = V_{CC}$ to GND<br>$V_{IS} = V_{CC}$ to GND<br>$V_{IC} = V_{IL}$ | | | ±0.1 | | ± 1 | | ± 1 | µA |
| $I_{IZ}$ | Switch input leakage current (switch on, output open) | 5.5 | $V_{OS} = V_{CC}$ to GND<br>$V_{IC} = V_{IH}$ | | | ±0.1 | | ± 1 | | ± 5 | µA |
| $I_{IN}$ | Control input leakage current | 0 to 5.5 | $V_{IC}$ = 5.5V or GND | | | ± 0.1 | | ± 1.0 | | ± 1.0 | µA |
| $I_{CC}$ | Quiescent supply current | 5.5 | $V_I = V_{CC}$ or GND | | | 1 | | 10 | | 20 | µA |

1. Voltage range is 5V ± 0.5V

**Table 6.**

| Symbol | Parameter | Test condition | | Value | | | | | | | Unit |
|---|---|---|---|---|---|---|---|---|---|---|---|
| | | $V_{CC}$ (V) | | $T_A$ = 25°C | | | -40 to 85°C | | -55 to 125°C | | |
| | | | | Min. | Typ. | Max. | Min. | Max. | Min. | Max. | |
| $t_{PD}$ | Delay time | 5.0(1) | | | 0.6 | 0.7 | | 1.0 | | 2.0 | ns |
| $t_{PLZ}$<br>$t_{PHZ}$ | Output disable time | 5.0(1) | $R_L$ = 500 Ω | | 6.0 | 7.5 | | 9.0 | | 10.0 | ns |
| $t_{PZL}$<br>$t_{PZH}$ | Output enable time | 5.0(1) | $R_L$ = 1 KΩ | | 2.5 | 4.0 | | 5.0 | | 7.0 | ns |

1. Voltage range is 5.0V ± 0.5V

**Table 7. Capacitive characteristics**

| Symbol | Parameter | Test condition | Value | | | | | | | Unit |
|---|---|---|---|---|---|---|---|---|---|---|
| | | | $T_A$ = 25°C | | | -40 to 85°C | | -55 to 125°C | | |
| | | | Min. | Typ. | Max. | Min. | Max. | Min. | Max. | |
| $C_{IN}$ | Input capacitance | | | 4 | 10 | | 10 | | 10 | pF |
| $C_{I/O}$ | Output capacitance | | | 10 | | | | | | pF |
| $C_{PD}$ | Power dissipation capacitance(1) | | | 3 | | | | | | pF |

1. $C_{PD}$ is defined as the value of the IC's internal equivalent capacitance which is calculated from the operating current consumption without load. (Refer to Test Circuit). Average operating current can be obtained by the following equation. $I_{CC(opr)} = C_{PD} \times V_{CC} \times f_{IN} + I_{CC}/2$(per switch)

**Table 8. Analog switch characteristics** (GND = 0V; $T_A$ = 25°C)

| Symbol | Parameter | Test Condition | | | Value | Unit |
|---|---|---|---|---|---|---|
| | | $V_{CC}$ (V) | $V_{IN}$ ($V_{p-p}$) | | Typ. | |
| | Sine wave distortion (THD) | 5.0(1) | 4 | $f_{IN}$ = 1 KHz $R_L$ = 10 KΩ, $C_L$ = 50 pF | 0.04 | % |
| $f_{MAX}$ | Frequency Response (Switch ON) | 5.0(1) | Adjust $f_{IN}$ voltage to obtain 0 dBm at $V_{OS}$. Increase $f_{IN}$ Frequency until dB meter reads -3dB $R_L$ = 50Ω, $C_L$ = 10 pF | | 180 | MHz |
| | Feedthrough Attenuation (Switch OFF) | 5.0(1) | $V_{IN}$ is centered at $V_{CC}/2$ Adjust $f_{IN}$ Voltage to obtained 0dBm at $V_{IS}$ $R_L$ = 600Ω, $C_L$ = 50 pF, $f_{IN}$ = 1MHz sine wave | | -60 | dB |
| | Crosstalk (Control Input to Signal Output) | 5.0(1) | $R_L$ = 600Ω, $C_L$ = 50 pF, $f_{IN}$ = 1MHz square wave tr = tf = 2.0ns | | 60 | mV |
| | Crosstalk Between Switches | 5.0(1) | $R_L$ = 600Ω, $C_L$ = 50 pF, $f_{IN}$ = 1MHz sine wave | | -60 | dB |

1. Voltage range is 5.0V ± 0.5V

# 5 Switching caracteristics test circuit

**Figure 4.**

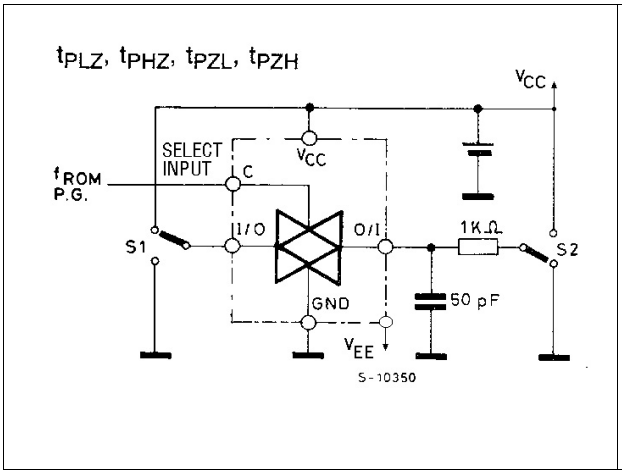


**Figure 5.**

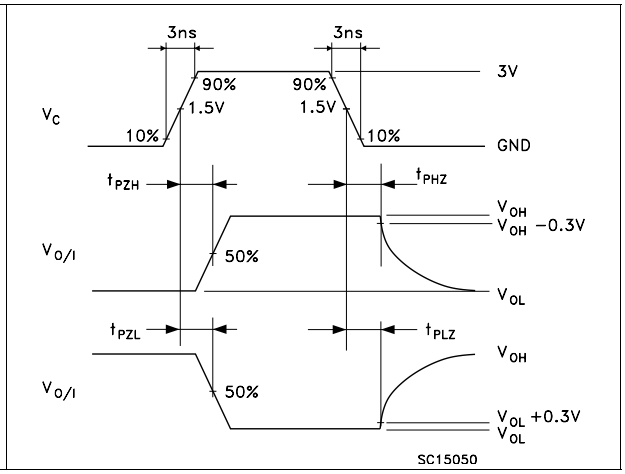


**Figure 6. Feedthrough attenuation**

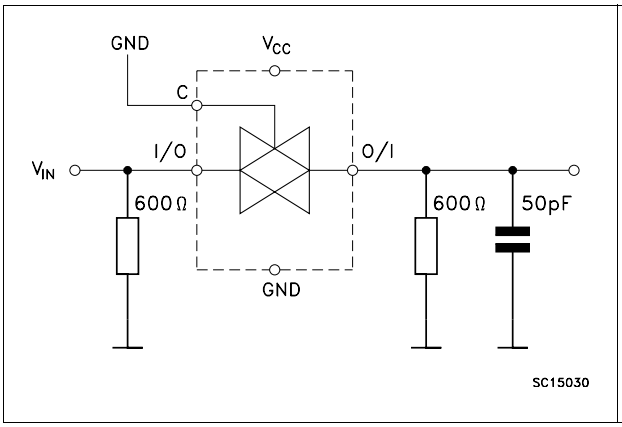


**Figure 7. Bandwidth attenuation**

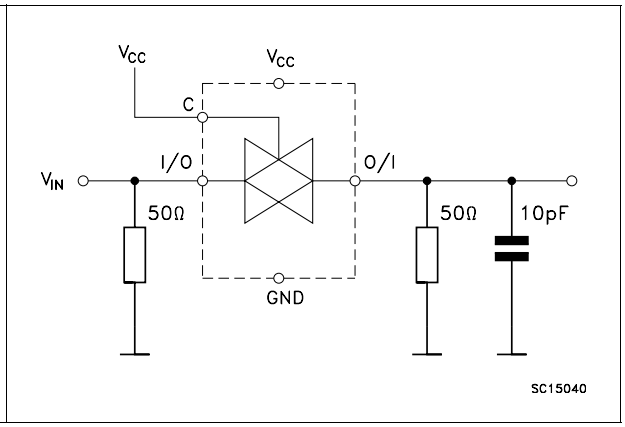


**Figure 8. $C_{I-O}$, $C_{I/O}$**

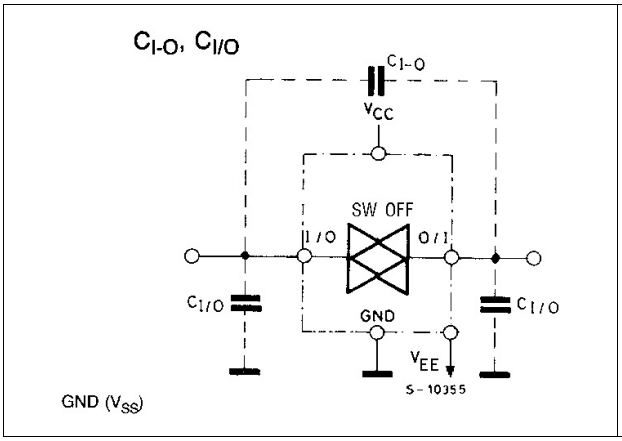


**Figure 9. Maximum control frequency**

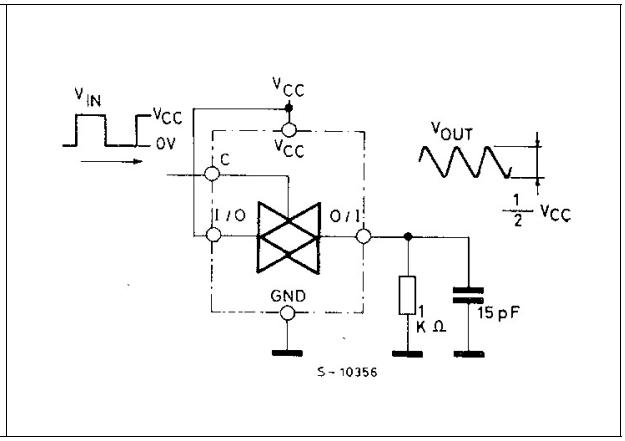

**Table 9. Crosstalk (control to output)**

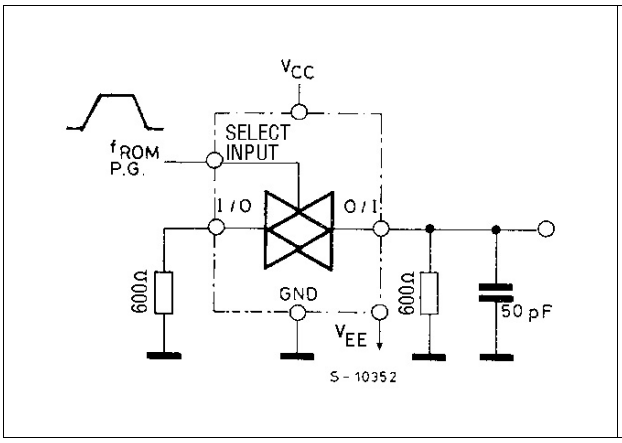


**Figure 10. Channel resistance ($R_{ON}$)**

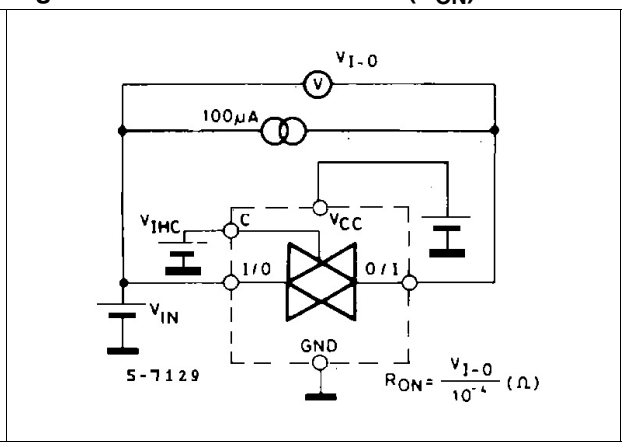


**Table 10. $I_{CC}$ (Opr.)**

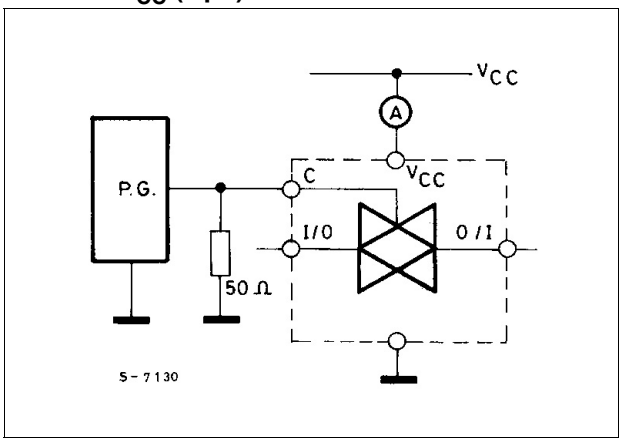

# 6 Package mechanical data

In order to meet environmental requirements, ST offers these devices in ECOPACK® packages. These packages have a Lead-free second level interconnect . The category of second level interconnect is marked on the package and on the inner box label, in compliance with JEDEC Standard JESD97. The maximum ratings related to soldering conditions are also marked on the inner box label. ECOPACK is an ST trademark. ECOPACK specifications are available at: www.st.com

## SOT23-8L MECHANICAL DATA

| DIM. | mm. | | | mils | | |
|---|---|---|---|---|---|---|
| | MIN. | TYP | MAX. | MIN. | TYP. | MAX. |
| A | 0.90 | | 1.45 | 35.4 | | 57.1 |
| A1 | 0.00 | | 0.15 | 0.0 | | 5.9 |
| A2 | 0.90 | | 1.30 | 35.4 | | 51.2 |
| b | 0.22 | | 0.38 | 8.6 | | 14.9 |
| C | 0.09 | | 0.20 | 3.5 | | 7.8 |
| D | 2.80 | | 3.00 | 110.2 | | 118.1 |
| E | 2.60 | | 3.00 | 102.3 | | 118.1 |
| E1 | 1.50 | | 1.75 | 59.0 | | 68.8 |
| e | 0 | .65 | | | 25.6 | |
| e1 | | 1.95 | | | 76.7 | |
| L | 0.35 | | 0.55 | 13.7 | | 21.6 |

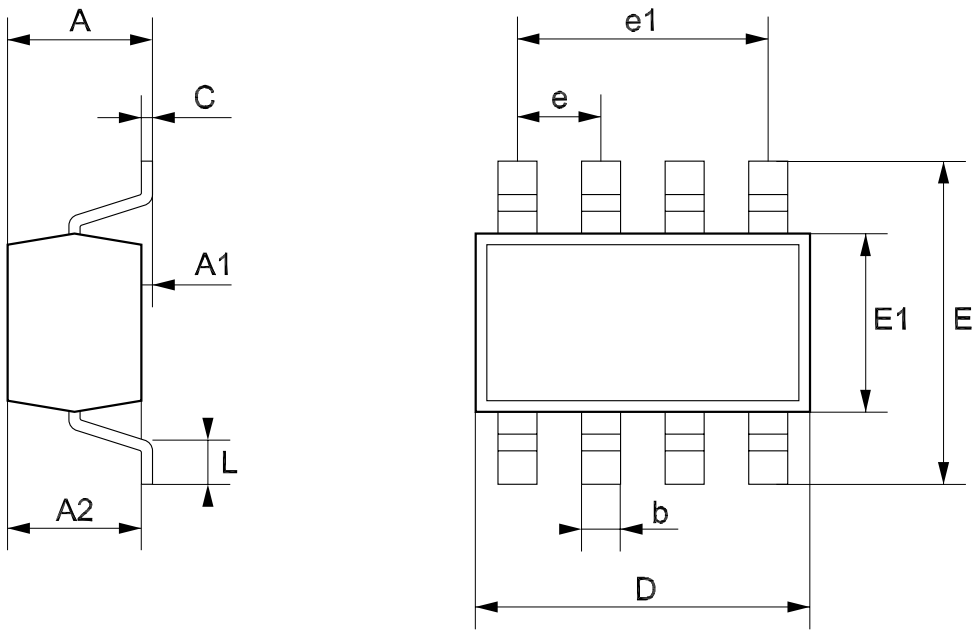

## Tape & Reel SOT23-xL MECHANICAL DATA

| DIM. | mm. | | | inch | | |
|---|---|---|---|---|---|---|
| | MIN. | TYP | MAX. | MIN. | TYP. | MAX. |
| A | | | 180 | | | 7.086 |
| C | 12.8 | 13.0 | 13.2 | 0.504 | 0.512 | 0.519 |
| D | 20.2 | | | 0.795 | | |
| N | 60 | | | 2.362 | | |
| T | | | 14.4 | | | 0.567 |
| Ao | 3.13 | 3.23 | 3.33 | 0.123 | 0.127 | 0.131 |
| Bo | 3.07 | 3.17 | 3.27 | 0.120 | 0.124 | 0.128 |
| Ko | 1.27 | 1.37 | 1.47 | 0.050 | 0.054 | 0.0.58 |
| Po | 3.9 | 4.0 | 4.1 | 0.153 | 0.157 | 0.161 |
| P | 3.9 | 4.0 | 4.1 | 0.153 | 0.157 | 0.161 |

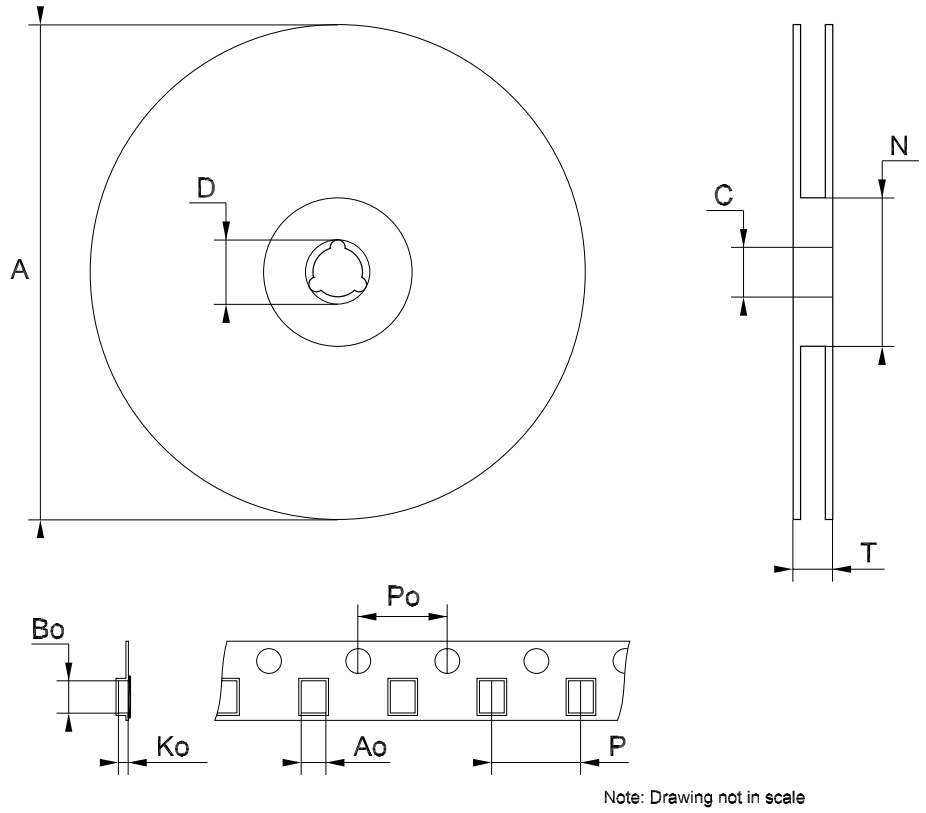

# 7 Revision history

**Table 11. Revision history**

| Date | Revision | Changes |
|---|---|---|
| 31-Jan-2007 | 4 | Document reformatted, Typo in $R_{ON}$ value |

**Please Read Carefully:**

Information in this document is provided solely in connection with ST products. STMicroelectronics NV and its subsidiaries (“ST”) reserve the right to make changes, corrections, modifications or improvements, to this document, and the products and services described herein at any time, without notice.

All ST products are sold pursuant to ST’s terms and conditions of sale.

Purchasers are solely responsible for the choice, selection and use of the ST products and services described herein, and ST assumes no liability whatsoever relating to the choice, selection or use of the ST products and services described herein.

No license, express or implied, by estoppel or otherwise, to any intellectual property rights is granted under this document. If any part of this document refers to any third party products or services it shall not be deemed a license grant by ST for the use of such third party products or services, or any intellectual property contained therein or considered as a warranty covering the use in any manner whatsoever of such third party products or services or any intellectual property contained therein.

**UNLESS OTHERWISE SET FORTH IN ST’S TERMS AND CONDITIONS OF SALE ST DISCLAIMS ANY EXPRESS OR IMPLIED WARRANTY WITH RESPECT TO THE USE AND/OR SALE OF ST PRODUCTS INCLUDING WITHOUT LIMITATION IMPLIED WARRANTIES OF MERCHANTABILITY, FITNESS FOR A PARTICULAR PURPOSE (AND THEIR EQUIVALENTS UNDER THE LAWS OF ANY JURISDICTION), OR INFRINGEMENT OF ANY PATENT, COPYRIGHT OR OTHER INTELLECTUAL PROPERTY RIGHT.**

**UNLESS EXPRESSLY APPROVED IN WRITING BY AN AUTHORIZED ST REPRESENTATIVE, ST PRODUCTS ARE NOT RECOMMENDED, AUTHORIZED OR WARRANTED FOR USE IN MILITARY, AIR CRAFT, SPACE, LIFE SAVING, OR LIFE SUSTAINING APPLICATIONS, NOR IN PRODUCTS OR SYSTEMS WHERE FAILURE OR MALFUNCTION MAY RESULT IN PERSONAL INJURY, DEATH, OR SEVERE PROPERTY OR ENVIRONMENTAL DAMAGE. ST PRODUCTS WHICH ARE NOT SPECIFIED AS "AUTOMOTIVE GRADE" MAY ONLY BE USED IN AUTOMOTIVE APPLICATIONS AT USER’S OWN RISK.**

Resale of ST products with provisions different from the statements and/or technical features set forth in this document shall immediately void any warranty granted by ST for the ST product or service described herein and shall not create or extend in any manner whatsoever, any liability of ST.

ST and the ST logo are trademarks or registered trademarks of ST in various countries.

Information in this document supersedes and replaces all information previously supplied.

The ST logo is a registered trademark of STMicroelectronics. All other names are the property of their respective owners.

© 2007 STMicroelectronics - All rights reserved

STMicroelectronics group of companies

Australia - Belgium - Brazil - Canada - China - Czech Republic - Finland - France - Germany - Hong Kong - India - Israel - Italy - Japan - Malaysia - Malta - Morocco - Singapore - Spain - Sweden - Switzerland - United Kingdom - United States of America

**www.st.com**